# FIXED AND EMITTER-STABILIZED

## BJT DC BIASING

*prepared by:*

**Gyro A. Madrona**

Electronics Engineer

# GRADING SYSTEM

# FINAL GRADE

| 30% | 30% | **40%** |
|---|---|---|
| PRELIM | MIDTERM | ENDTERM |

# TERM GRADE

50%

WEEKLY

50%

EXAM

# 100%

LABORATORY

# PENALTY

0

ABSENT

3

45-min LATE

7 max

15-min LATE

## TOPIC OUTLINE

### Fixed-Bias Circuit

- Base-Emitter Loop
- Collector-Emitter Loop
- Load Line Analysis

### Emitter-Stabilized Bias Circuit

# FIXED-BIAS CIRCUIT

Bipolar

"two polarities"

## Bipolar Junction Transistor

BJT uses both free **electrons** and **holes**

# BASIC RELATIONSHIPS

$$v_{BE} = 0.7V$$

$$i_E = (\beta + 1)i_B$$

$$i_E \cong i_C$$

$$i_c = \beta i_B$$

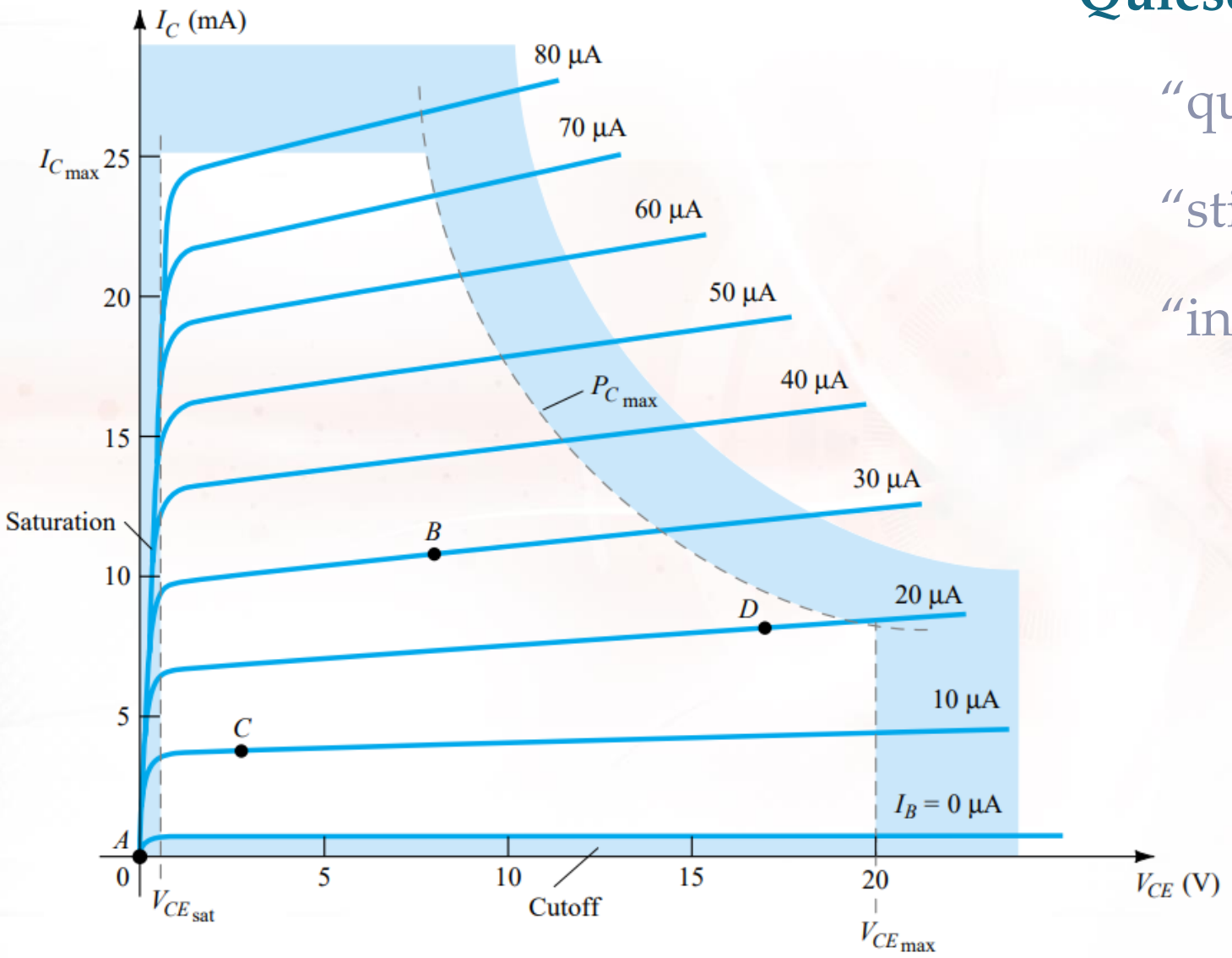


## **Quiescent Point** (Q-point)

"quiet"

"still"

"inactive"

# BASE-EMITTER LOOP

KVL @ B-E,

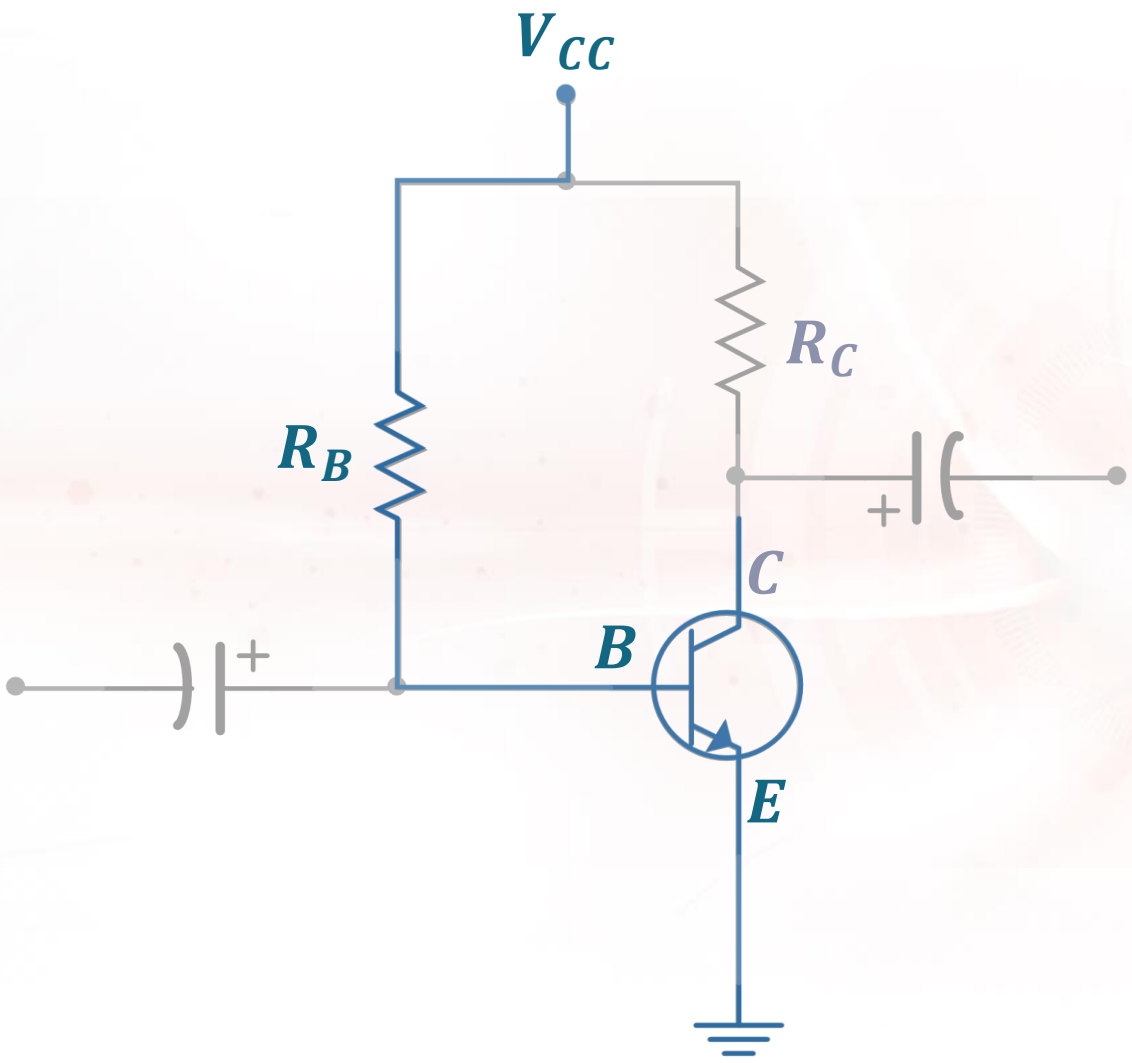


$$i_B = \frac{V_{CC} - v_{BE}}{R_B}$$

# COLLECTOR-EMITTER LOOP

KVL @ C-E,

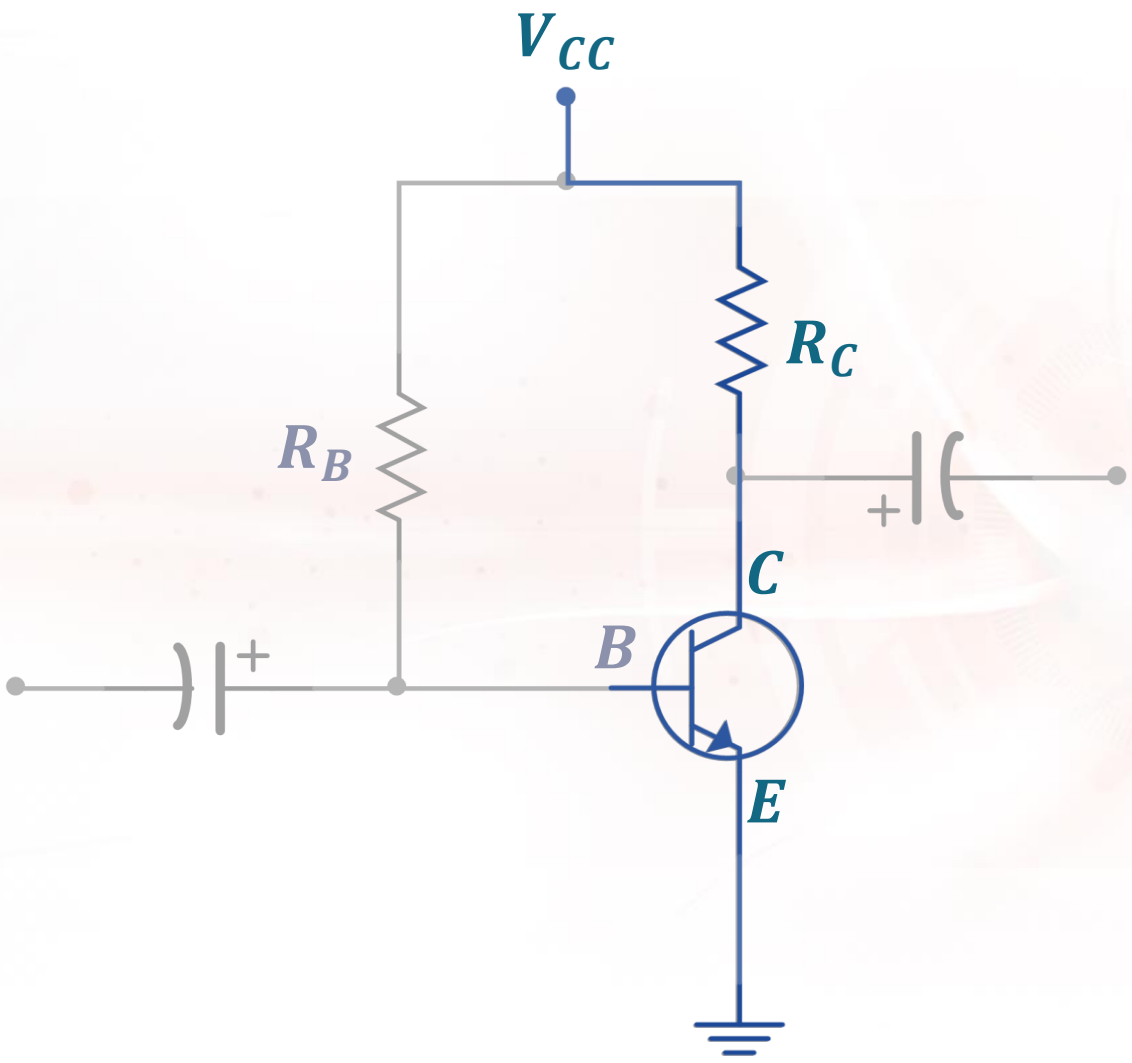


$$v_{CE} = V_{CC} - i_C R_C$$

Determine the following for the **fixed-biasing** network.

- $i_{BQ}$ and $i_{CQ}$
- $v_{CEQ}$
- $v_B$ and $v_C$
- $v_{BC}$

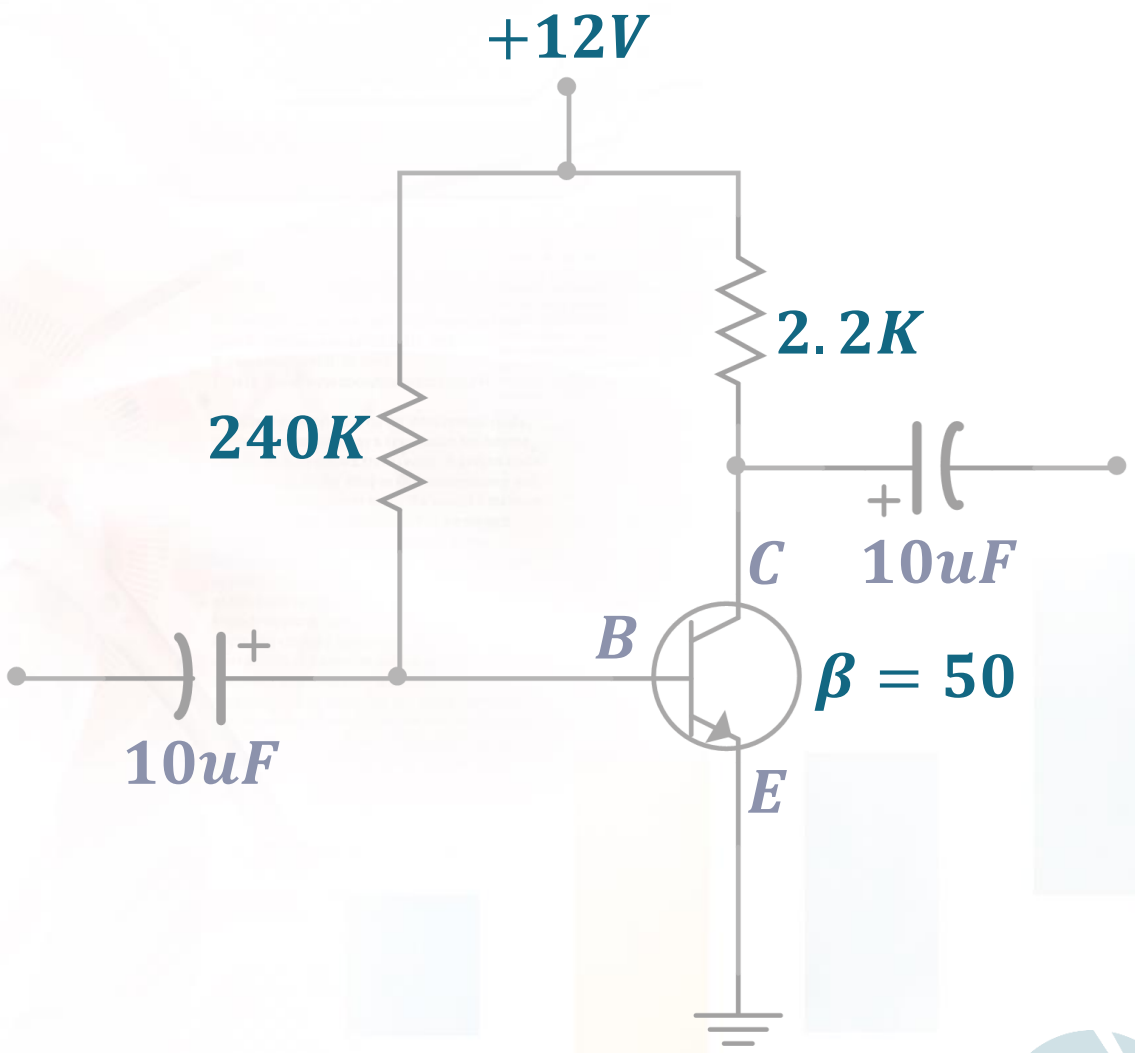

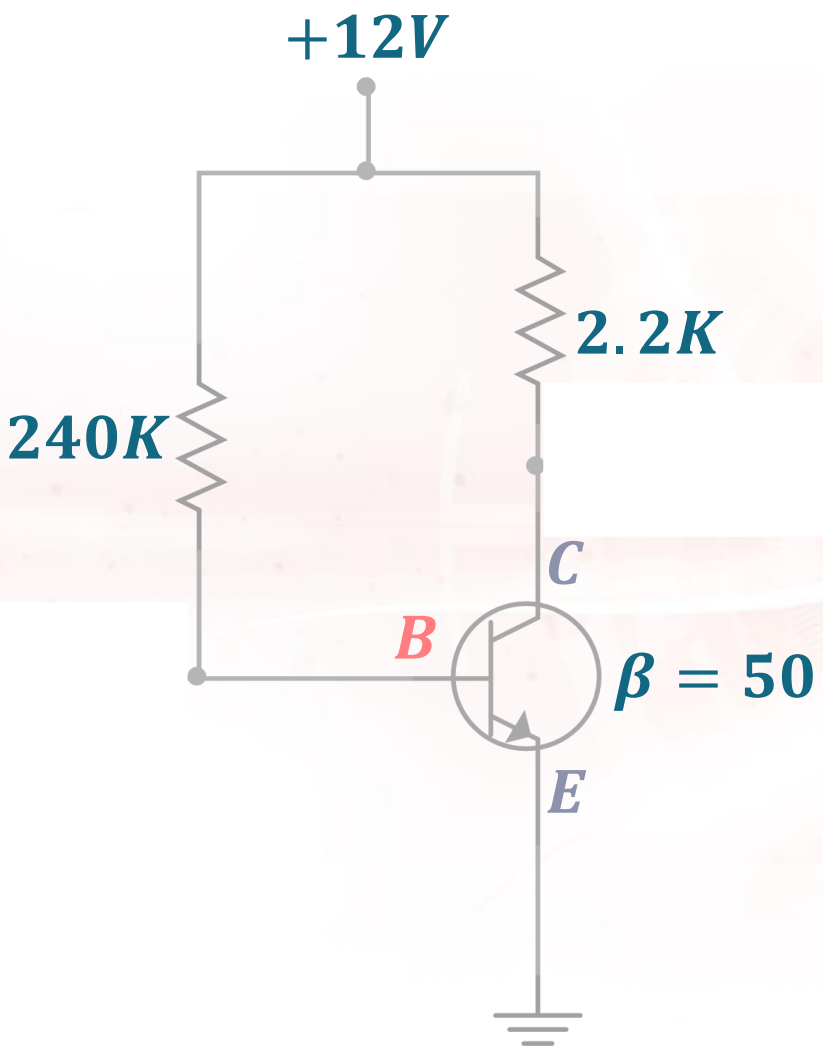
+12V
2.2K
240K
C
B
β = 50
E

$i_{CQ}$-

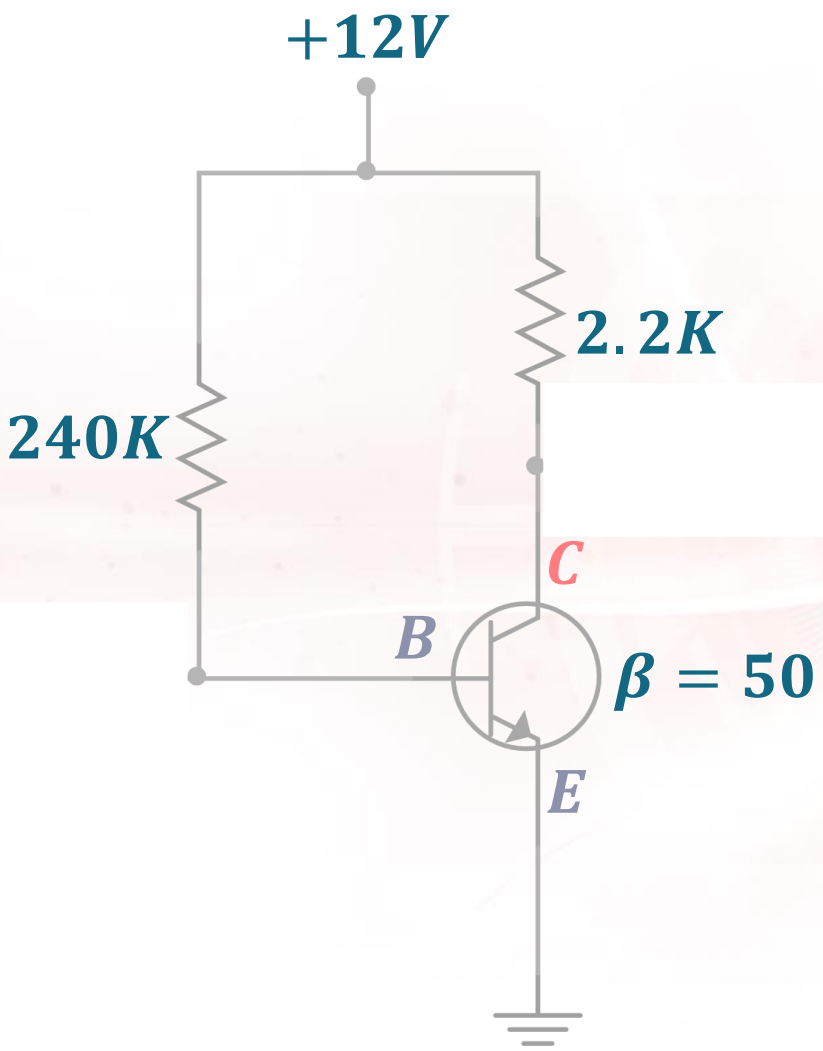

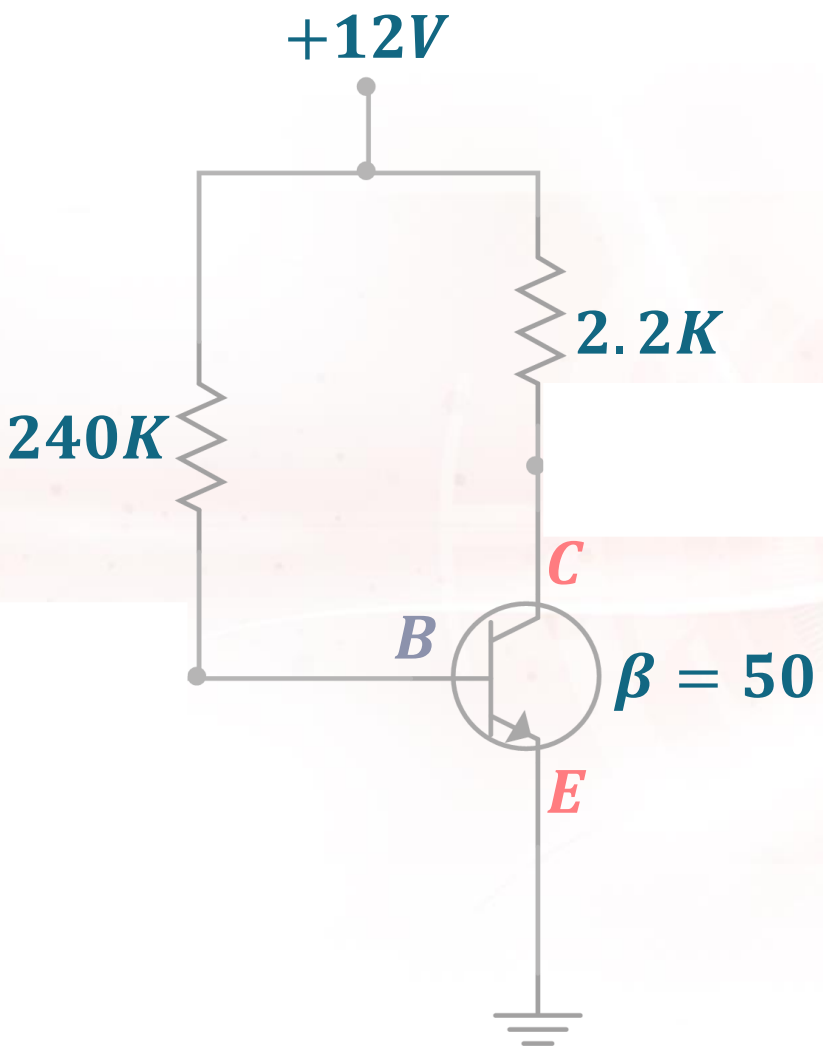
+12V
2.2K
240K
C
B
β = 50
E

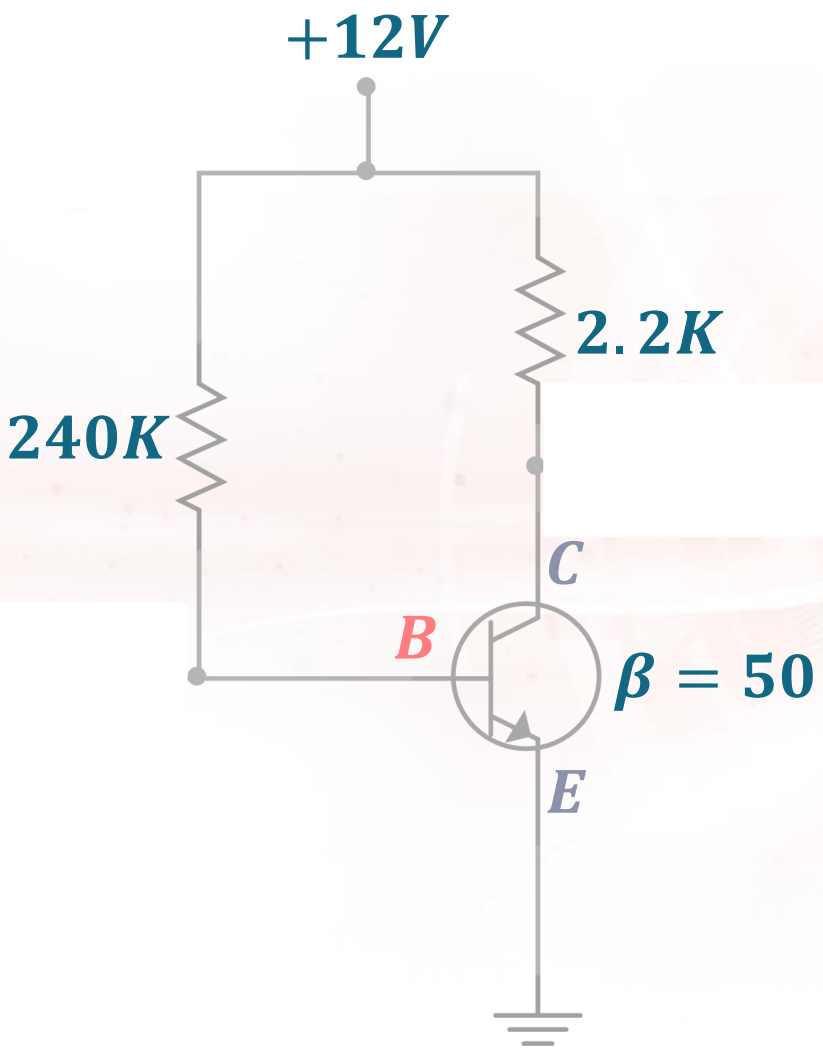
+12V
2.2K
240K
C
B
β = 50
E

$v_{C-}$

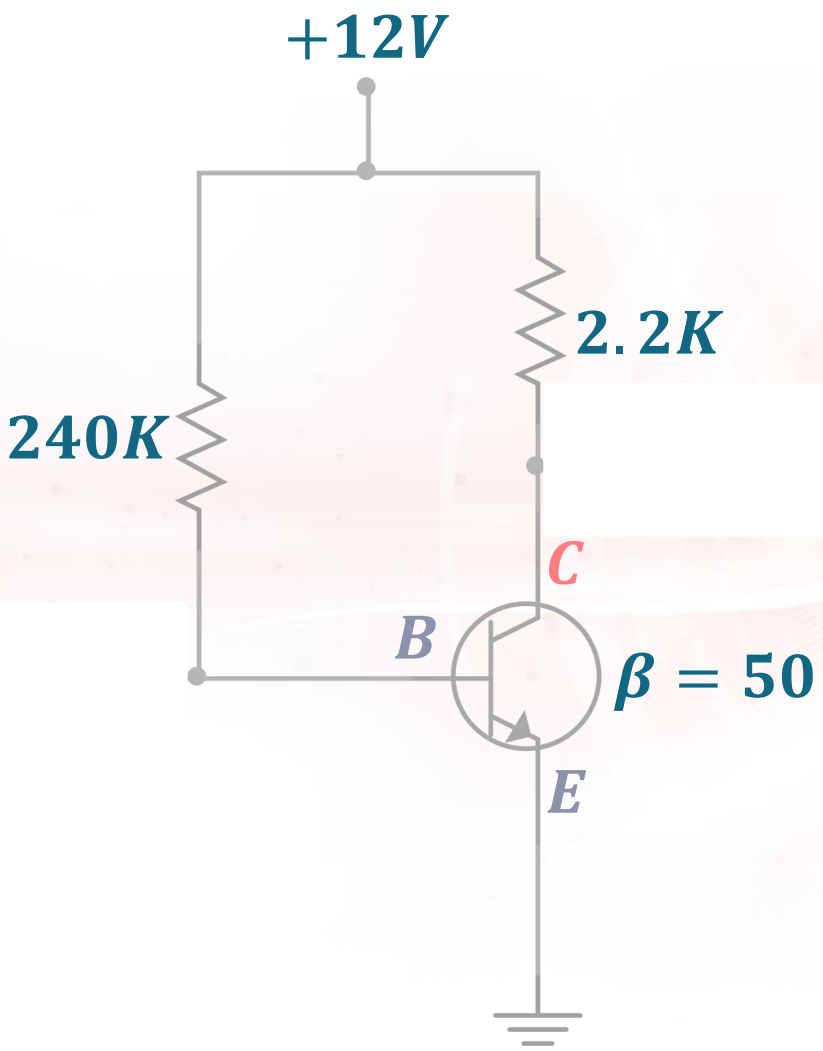

$v_{BC}$-

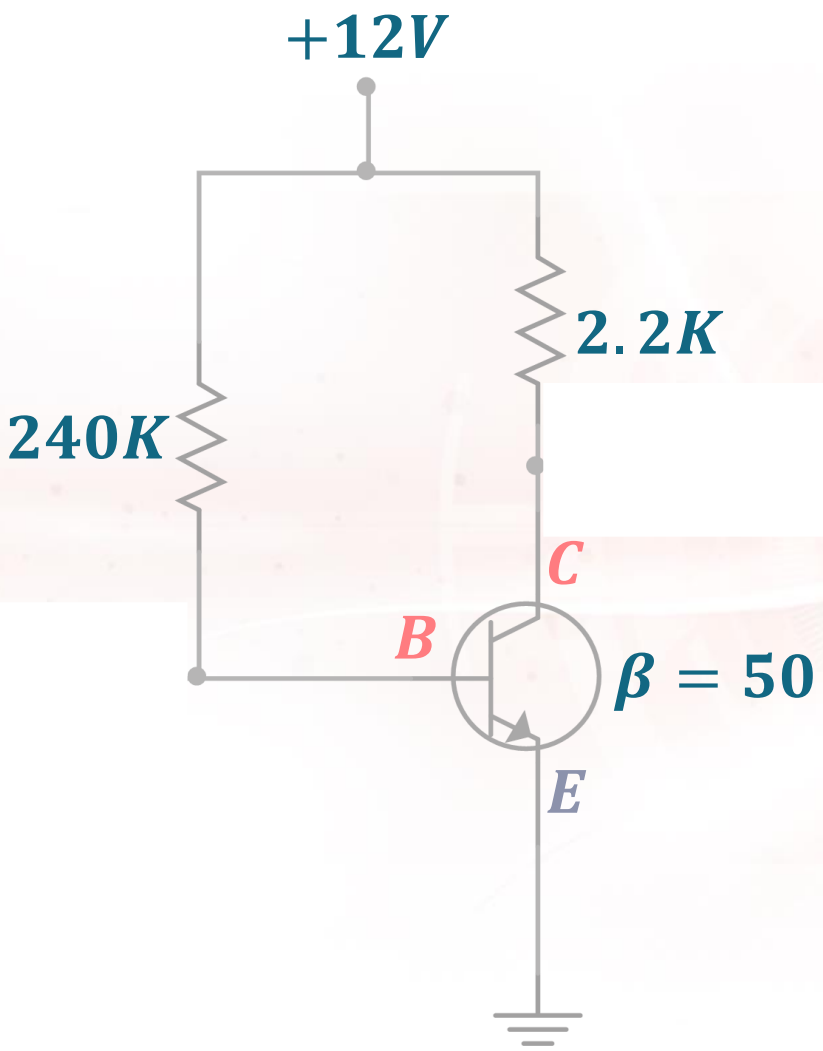

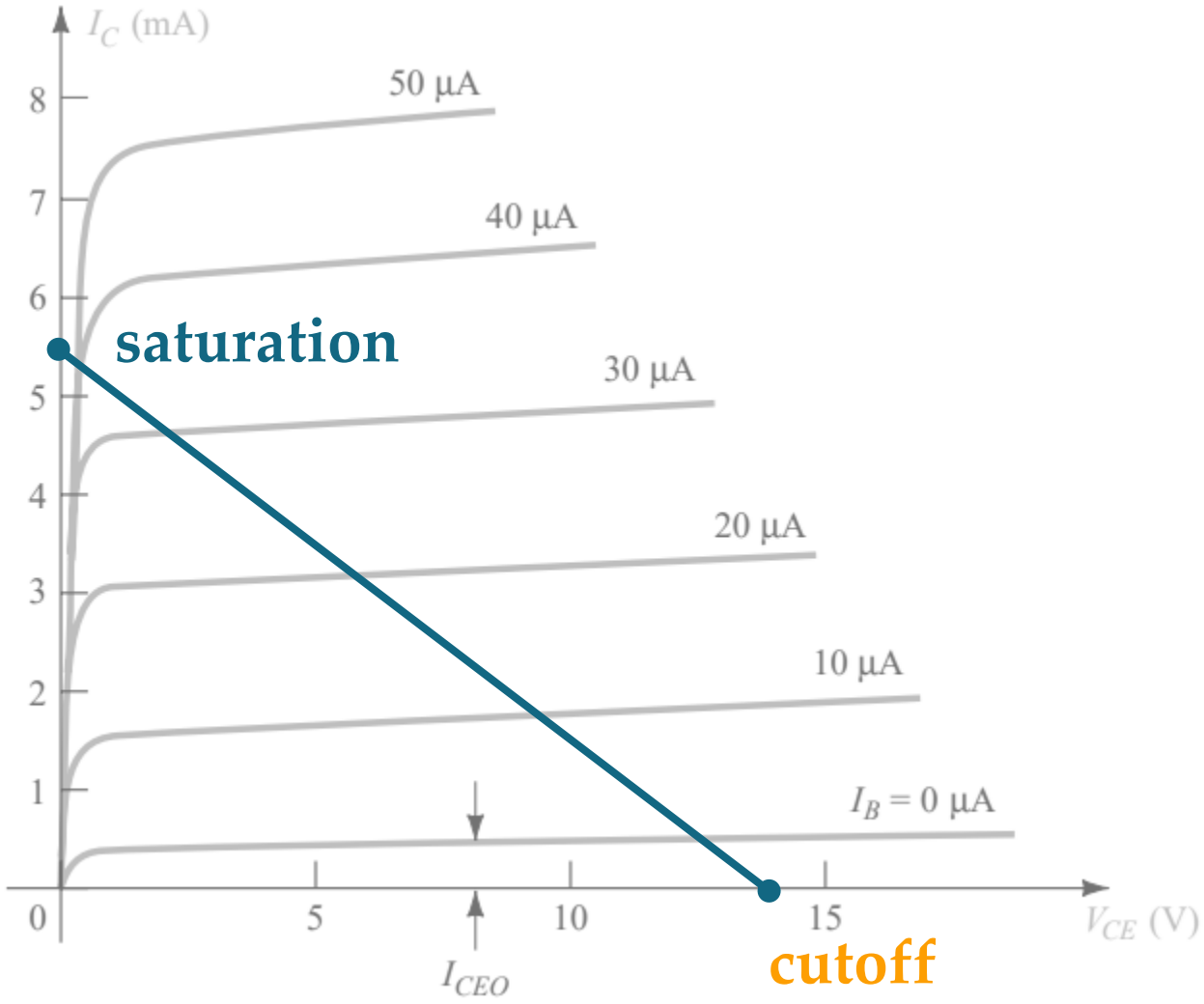


## Saturation Point

the maximum possible collector current

$$i_{C(sat)} | v_{CE} = 0$$

## Cutoff Point

the maximum possible collector-emitter voltage

$$v_{CE(cutoff)} | i_C = 0$$

# SATURATION POINT

"Mental **Short**"

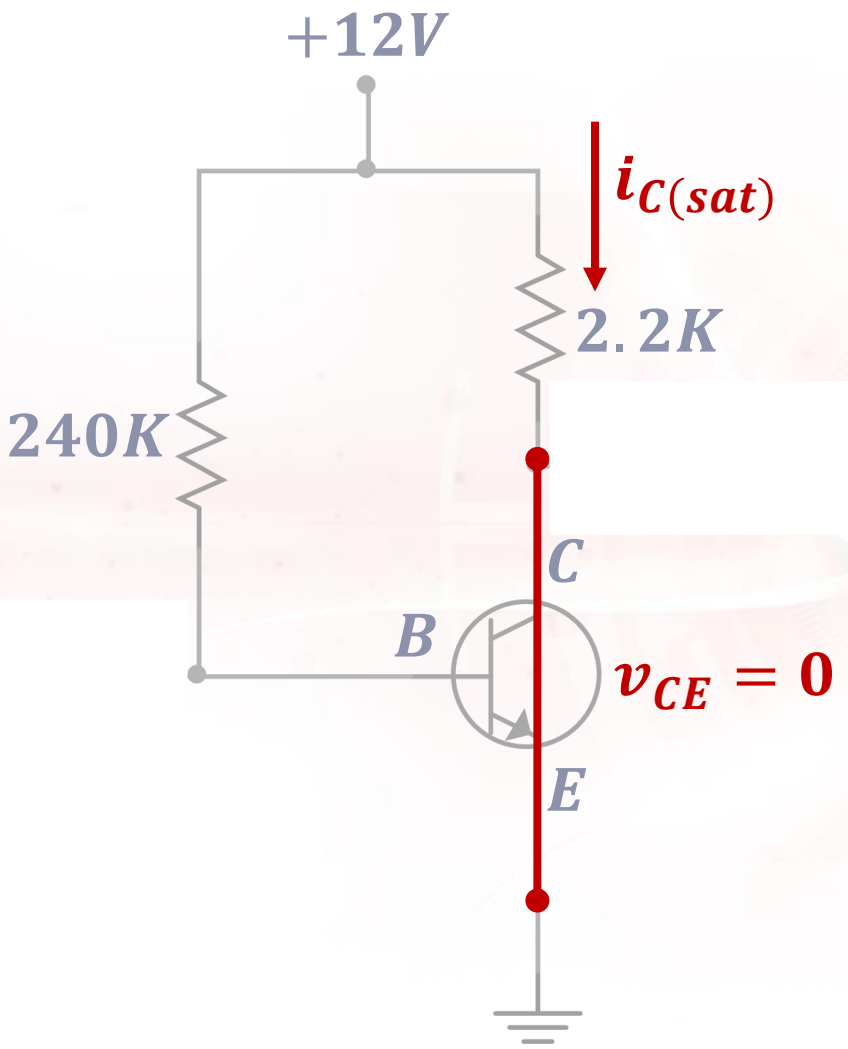

# CUTOFF POINT

"Mental Open"

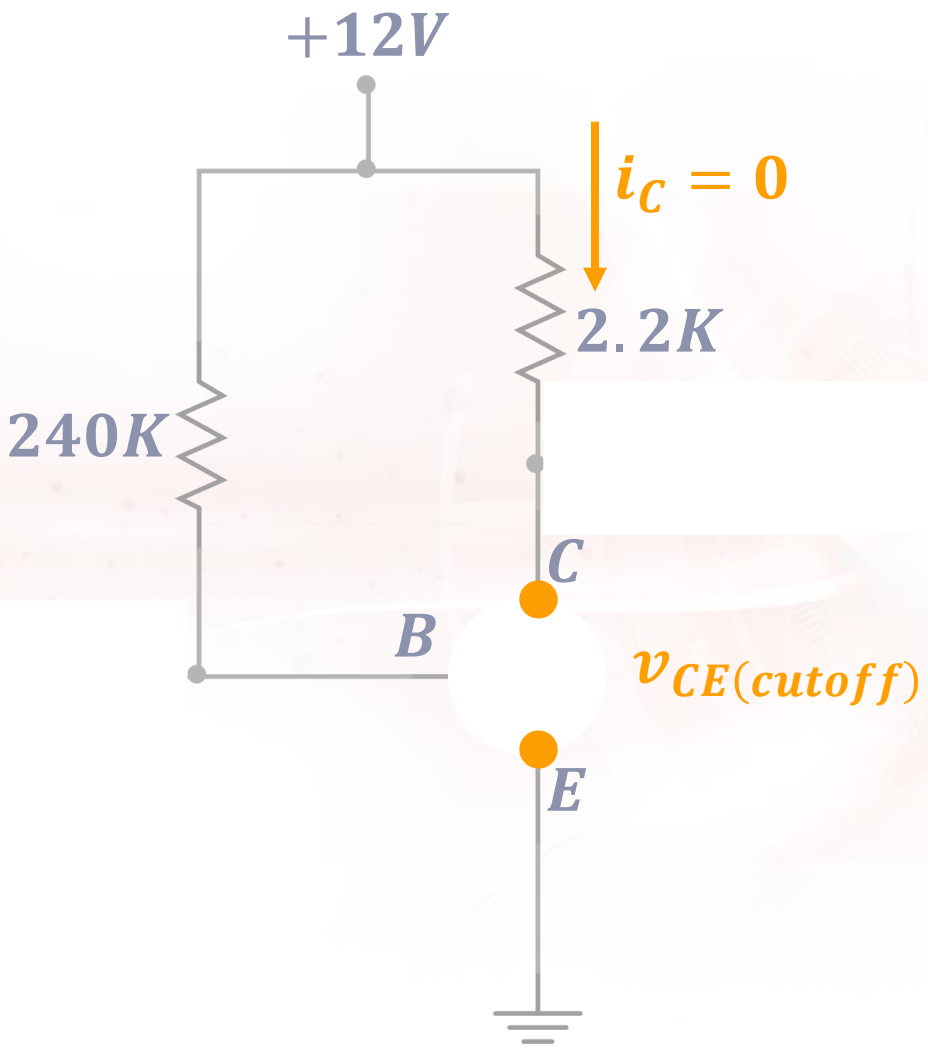

# LOAD LINE ANALYSIS

# EMITTER-STABILIZED BIAS CIRCUIT

# BASE-EMITTER LOOP

KVL @ B-E,

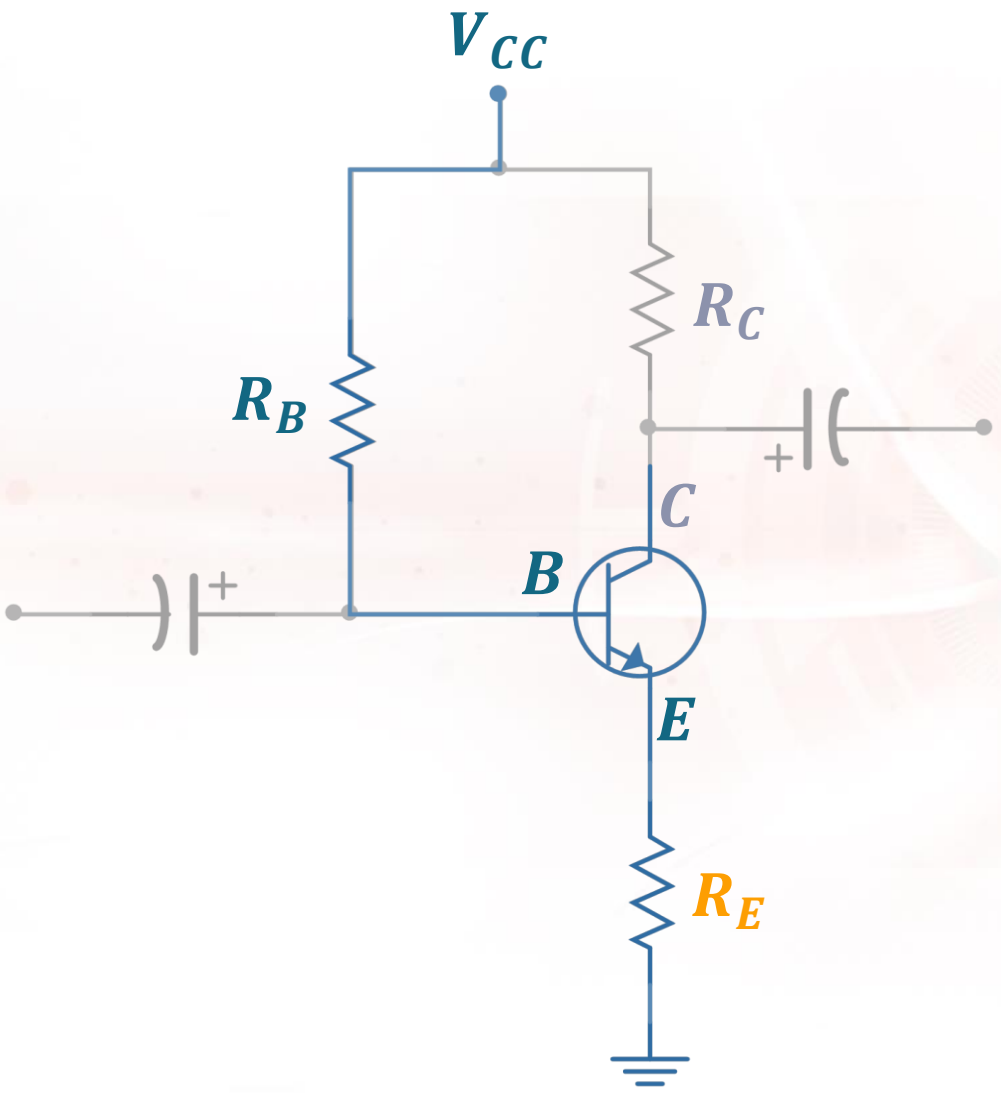


$$i_B = \frac{V_{CC} - v_{BE}}{R_B + (\beta + 1)R_E}$$

# COLLECTOR-EMITTER LOOP

KVL @ C-E,

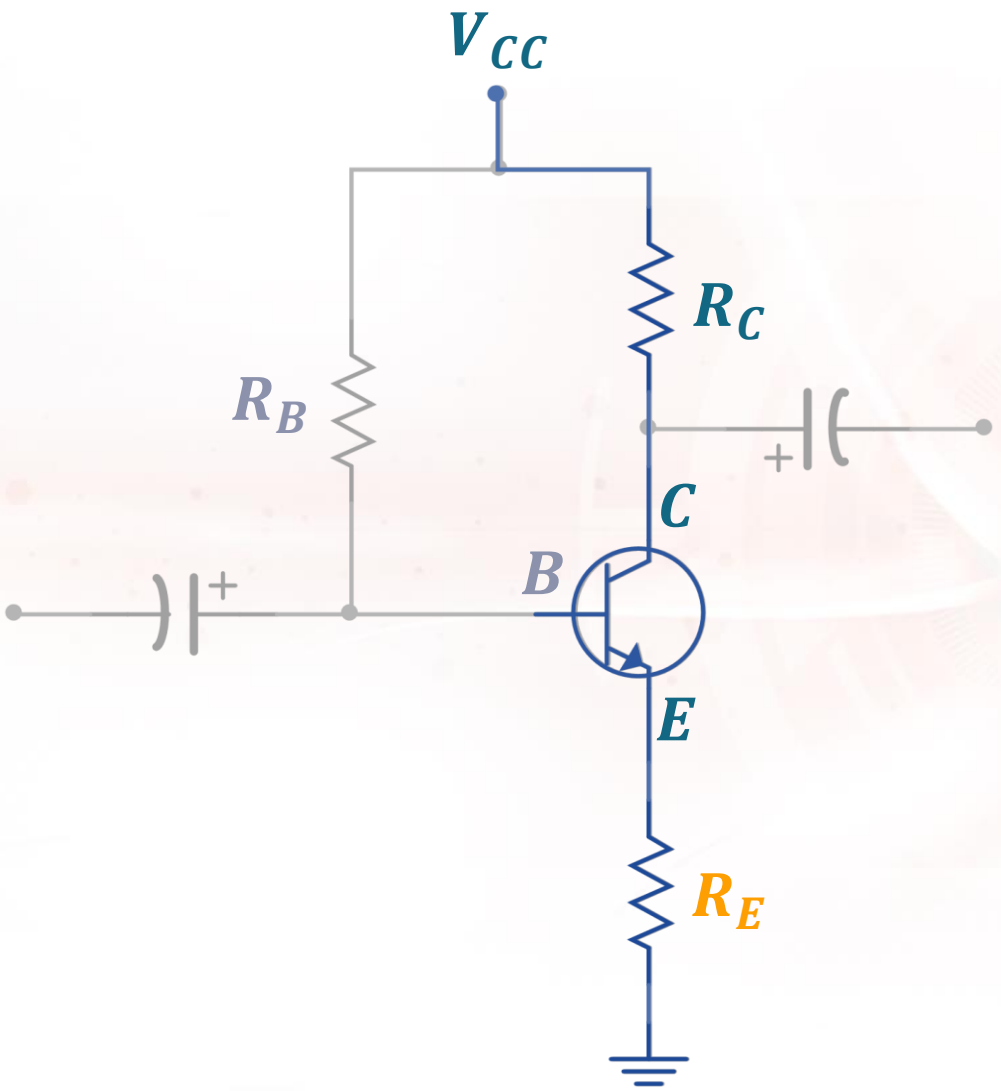


$$v_{CE} = V_{CC} - i_C(R_C + R_E)$$

For the given **emitter bias** network, determine:

$i_B$

$i_C$

$v_{CE}$

$v_C$

$v_E$

$v_B$

$v_{BC}$

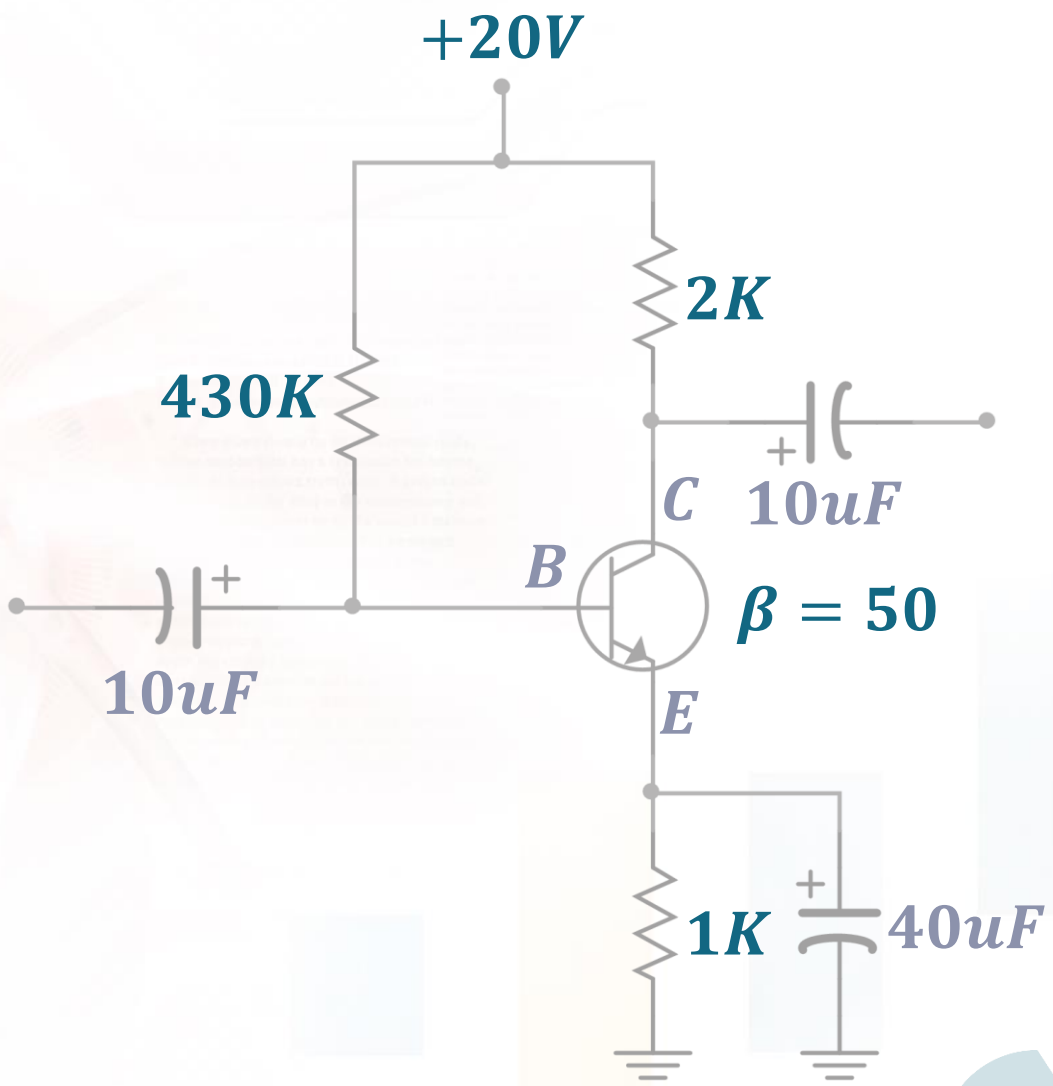

$i_B$-

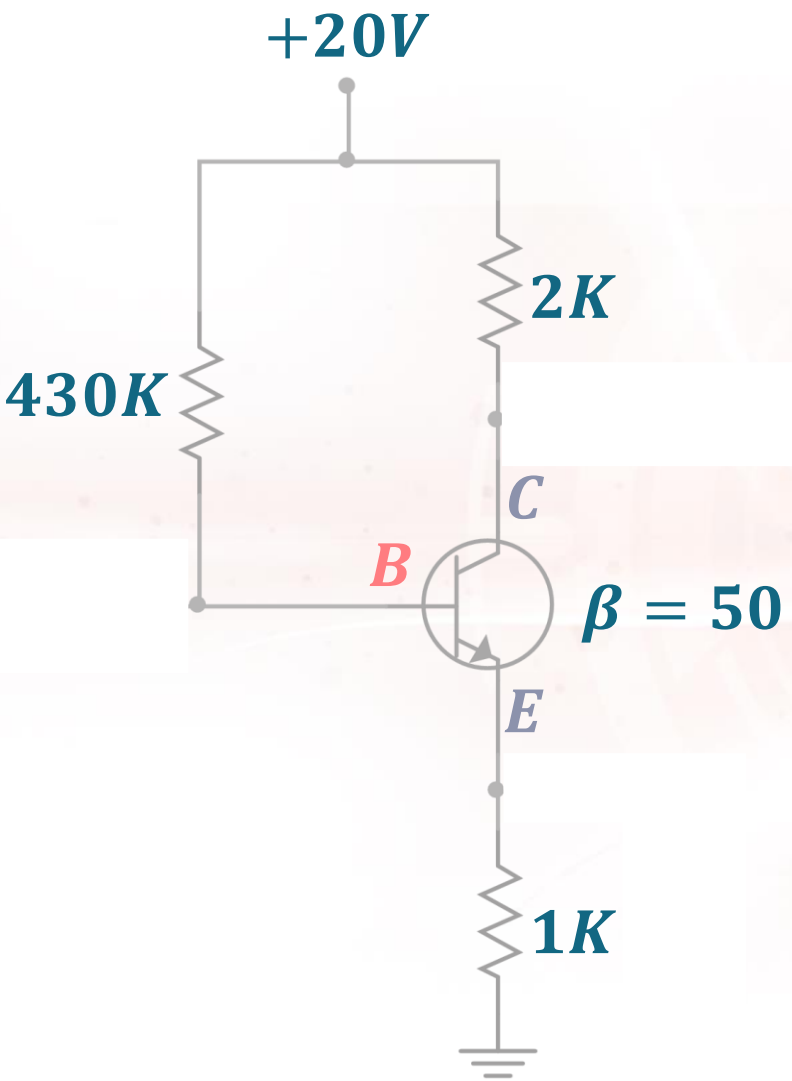

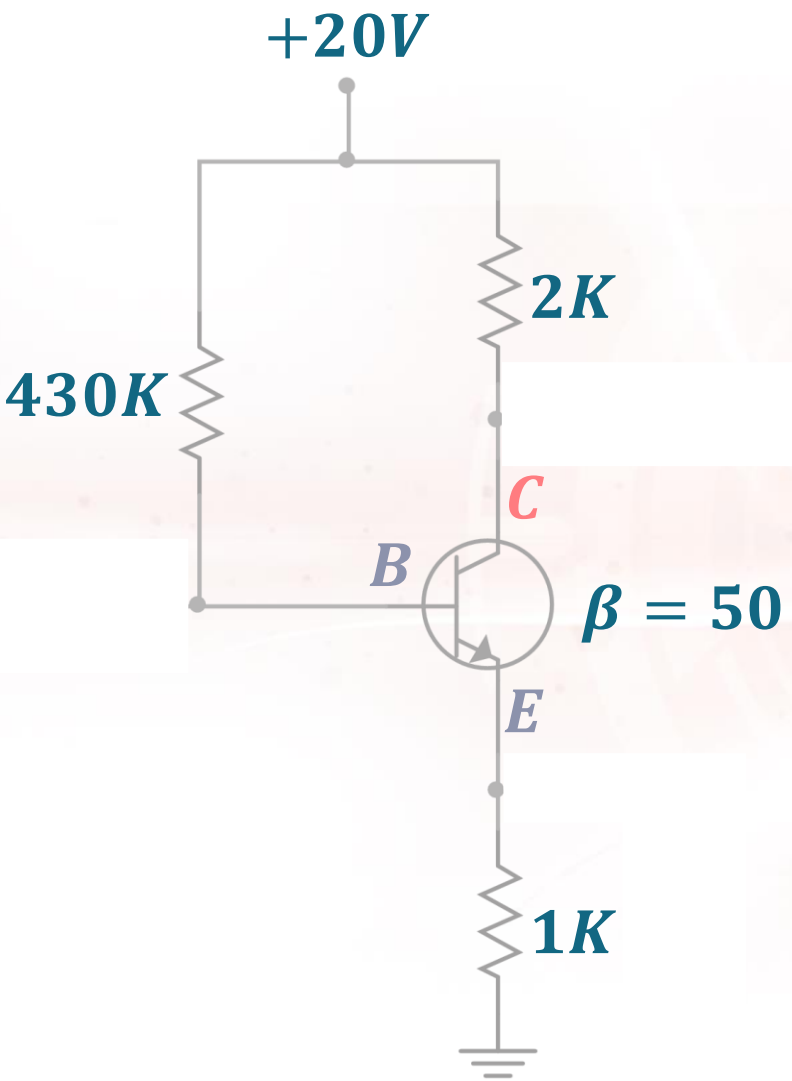
+20V
2K
430K
C
B
β = 50
E
1K

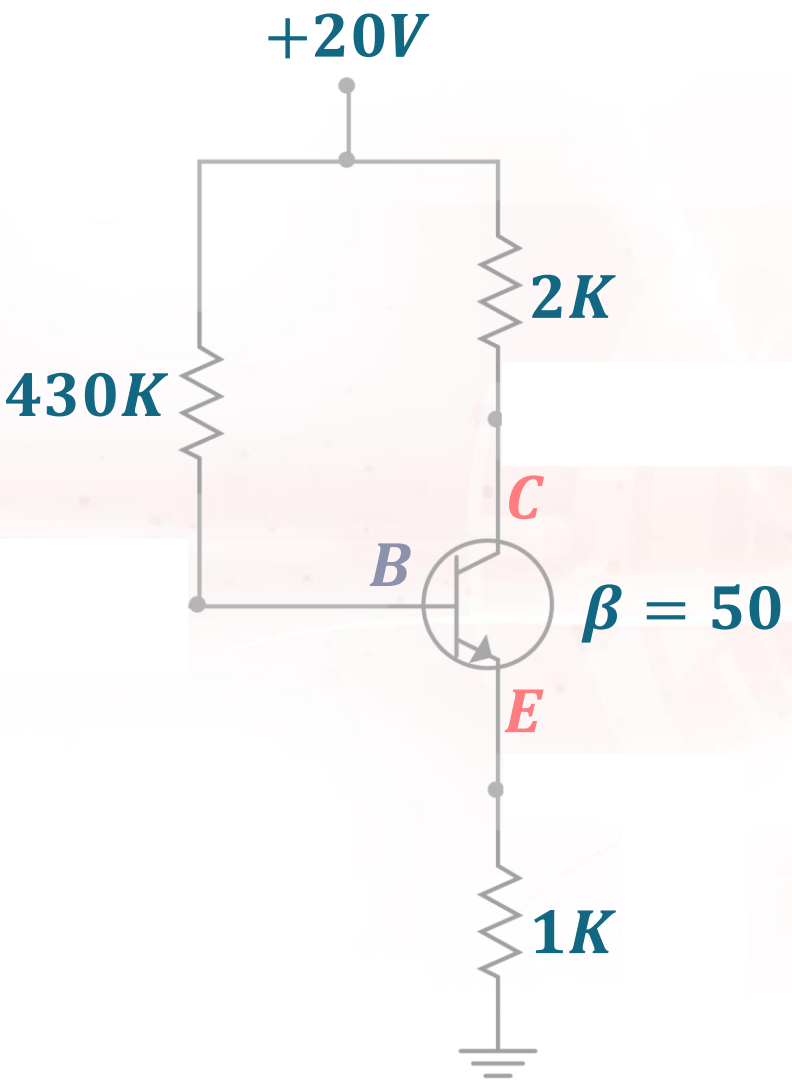
+20V
2K
430K
C
B
β = 50
E
1K

$v_{C-}$

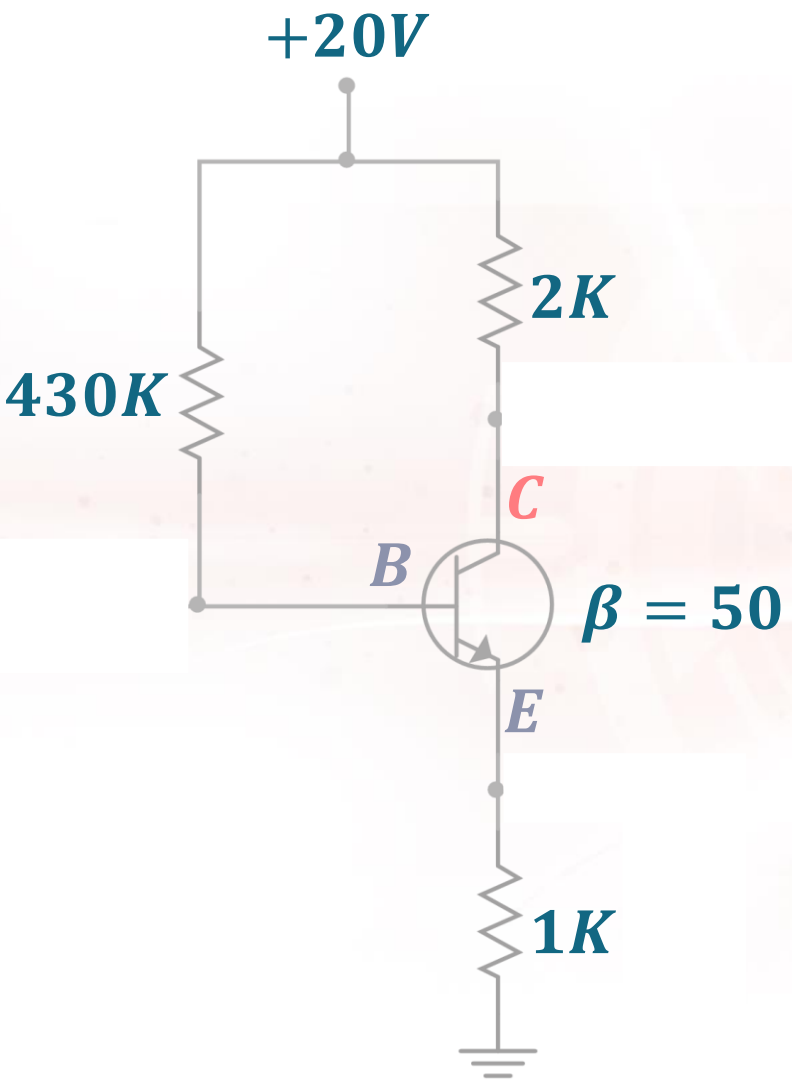

$v_{E-}$

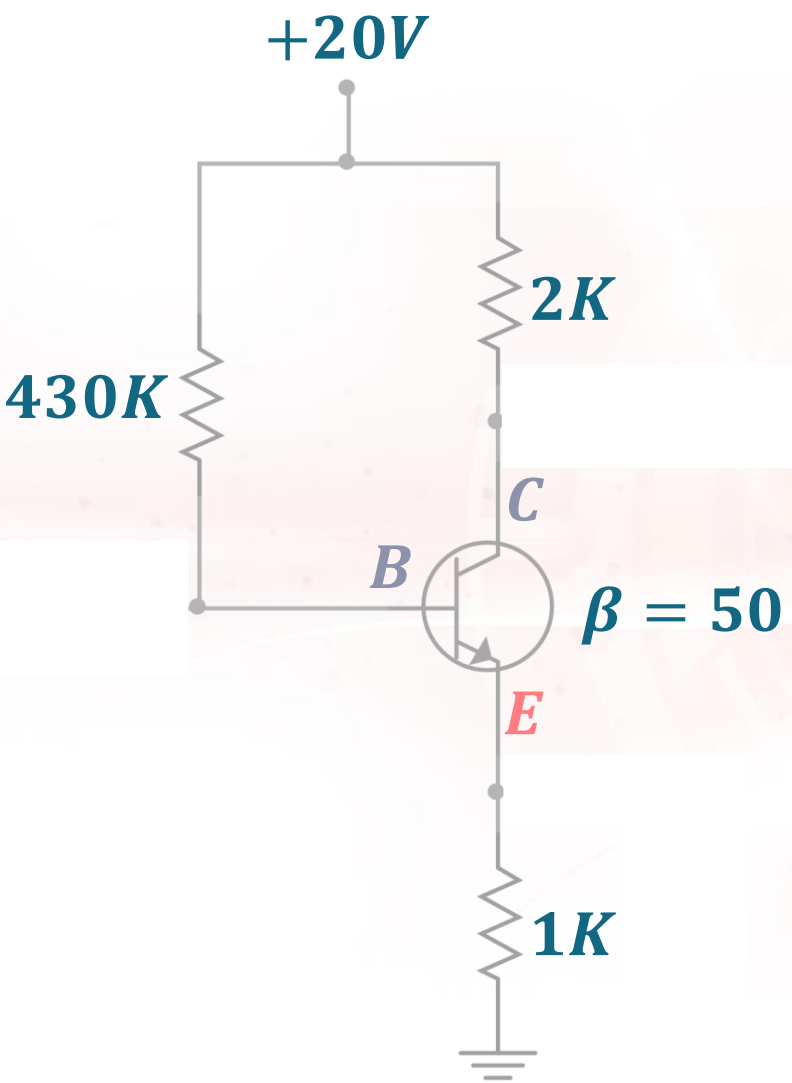

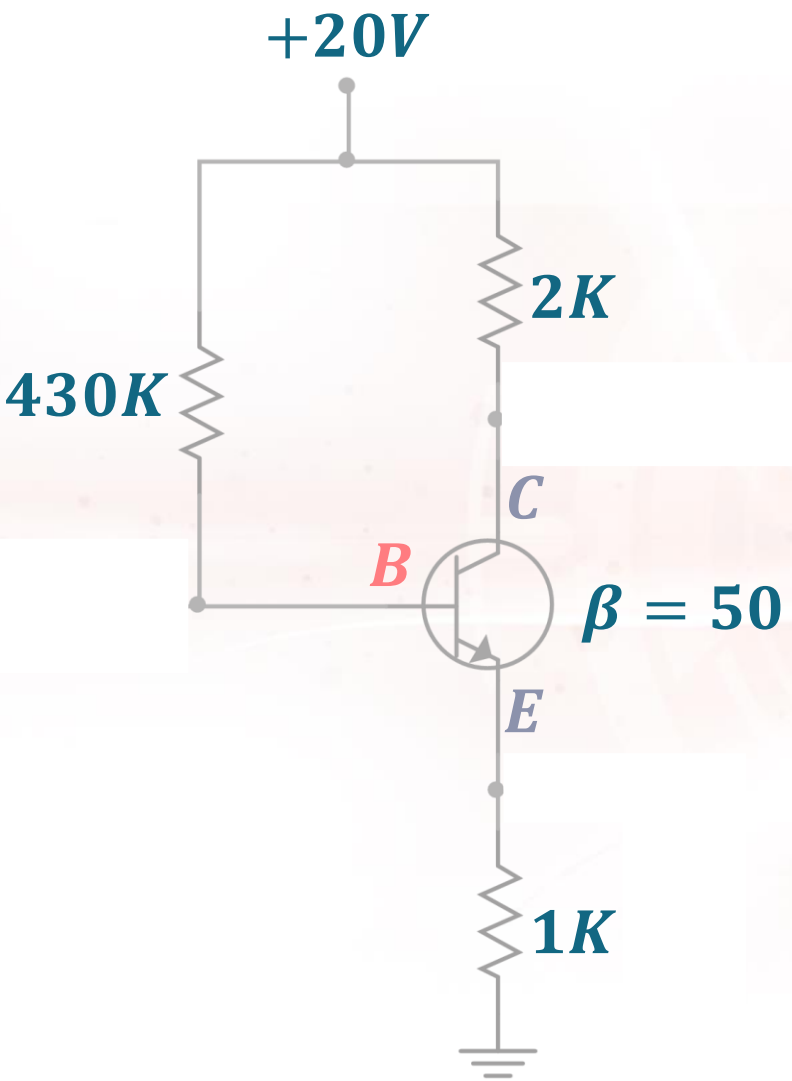
+20V
2K
430K
C
B
β = 50
E
1K

$v_{BC}$-

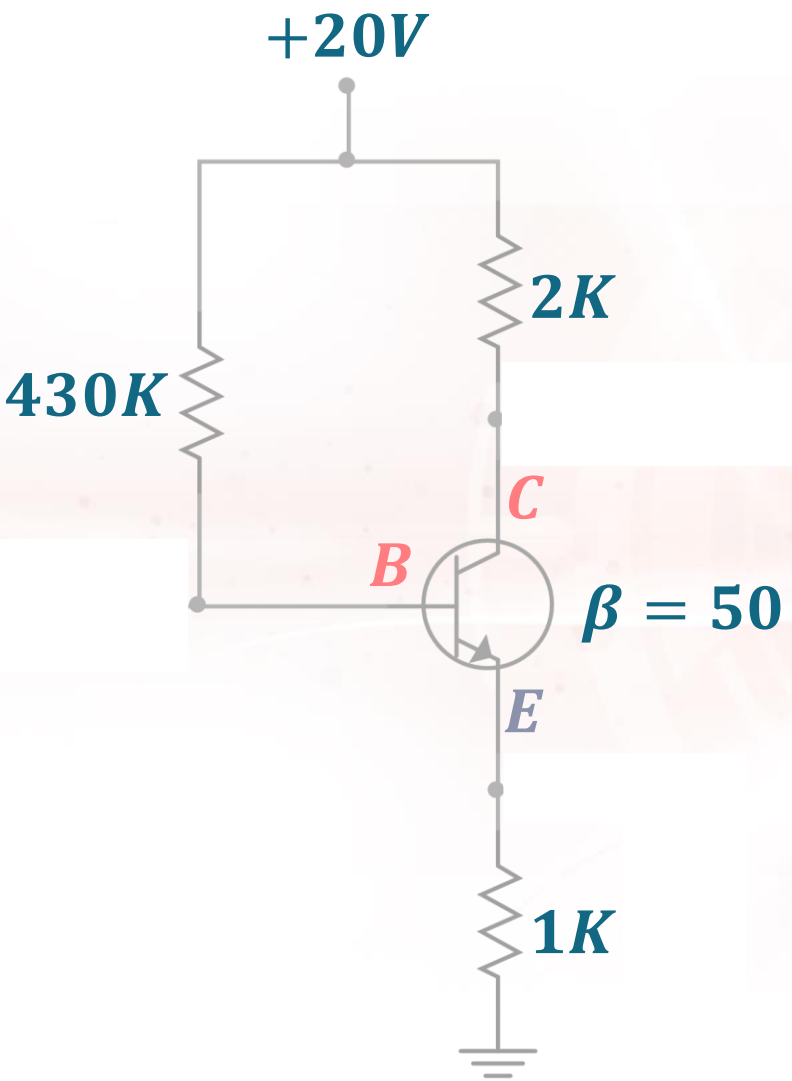

# SATURATION POINT

"Mental **Short**"

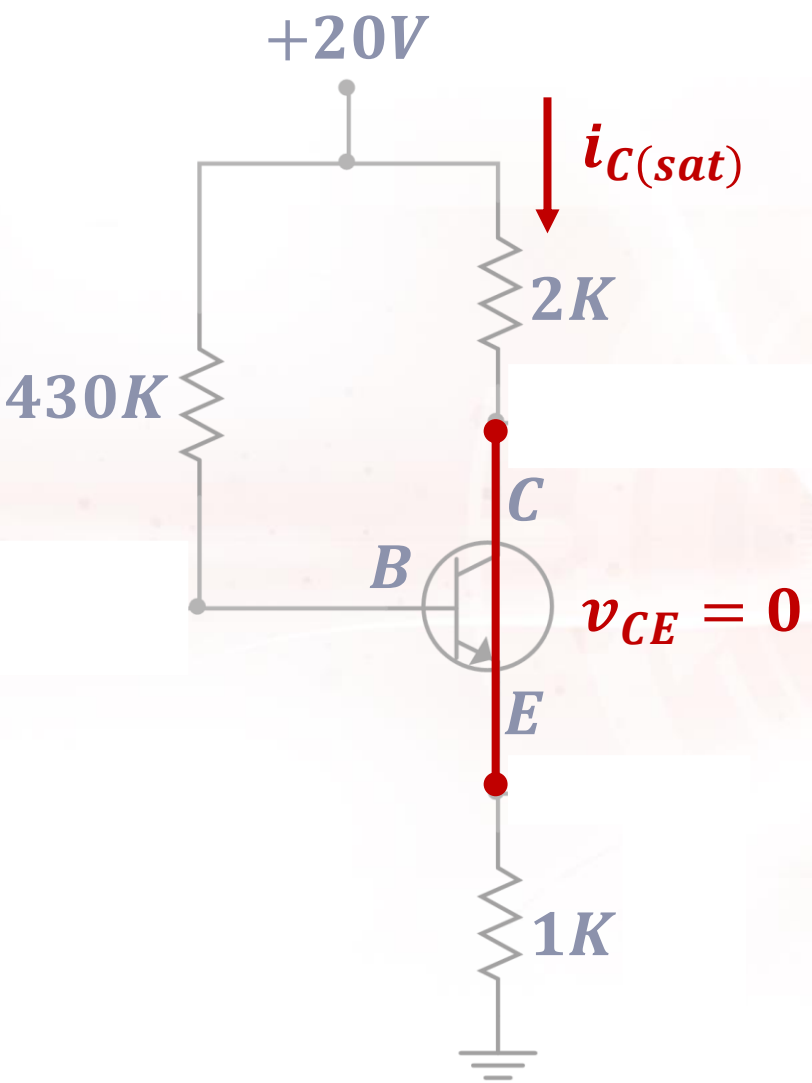

# CUTOFF POINT

"Mental Open"

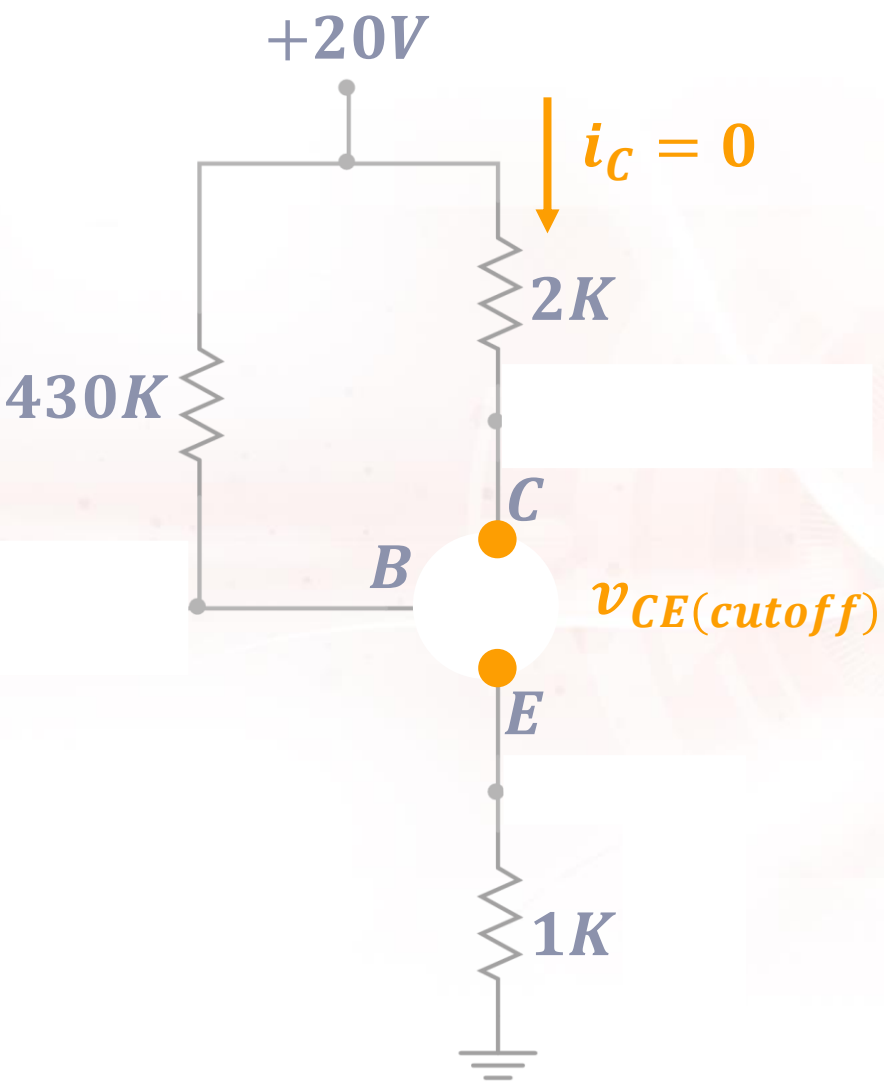

# LOAD LINE ANALYSIS

# IMPROVED BIAS STABILITY

| Bias | $\beta$ | $i_B(\mu A)$ | $i_C(mA)$ | $V_{CE}(V)$ | $\%\Delta V_{CE}$ |
|---|---|---|---|---|---|
| Fixed-Biased | 50 | 47.1 | 2.3 | 6.8 | -76% |
| | 100 | 47.1 | 4.7 | 1.6 | |
| **Emitter Stabilized** | **50** | **40.1** | **2.0** | **14.0** | **-35%** |
| | **100** | **36.3** | **3.6** | **9.1** | |

# LABORATORY